EXCOTRAMED

Specifications

Output	
Tube Vol. / Current	125 kV / 400 mA
Voltage range	40 - 125 kV in steps of 1 kV
mAs Range	0.1 mAs - 250 mAs
Max. output	30 kW at 100 kV
X-ray Tube	
Application	X 22 0,8 / 1,3
Anode	Rotating
Focal Spot	0,8 mm small focus; 1,3 mm large focus
Nominal Power of Anode	16 kW small focus, 32 kW large focus
Features	
Display	7" LCD touch screen
Table Top	4-way-floating / 160 cm (base)
Casette holder	self centering (18 x 24 cm to 43 x 43 cm)
APR techniques	1800 combination possibilities
	3 patient sizes selectable
	Focal spot selection

8 anatomical areas / more than 1000 exams each area

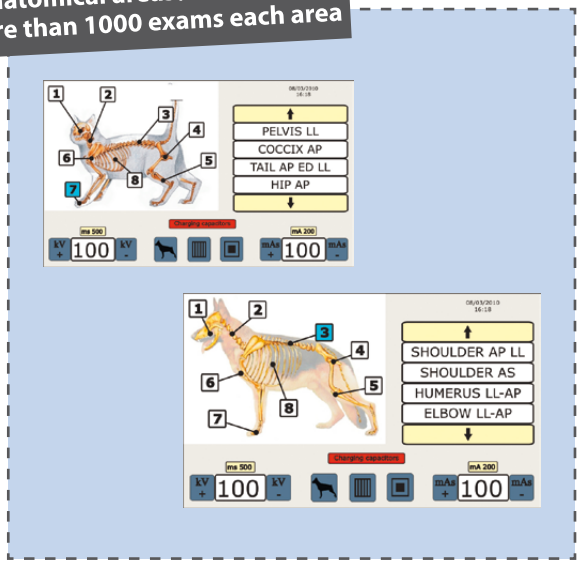

Dimensions & Movement

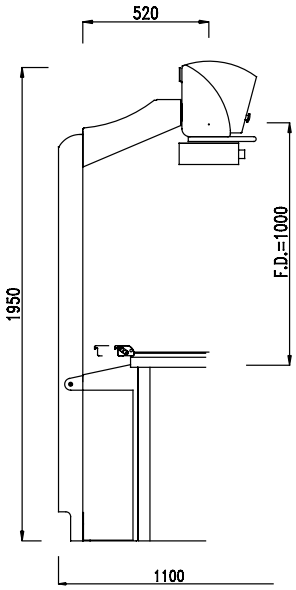

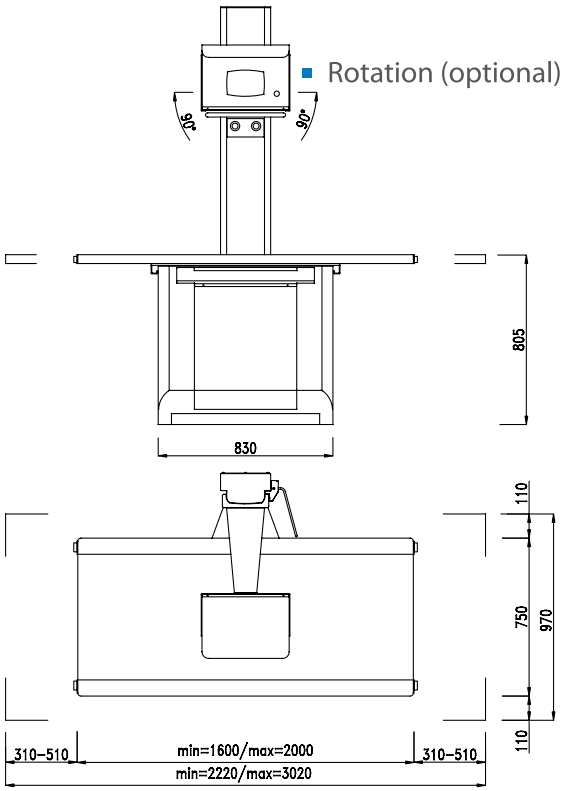

- Rotation (optional)

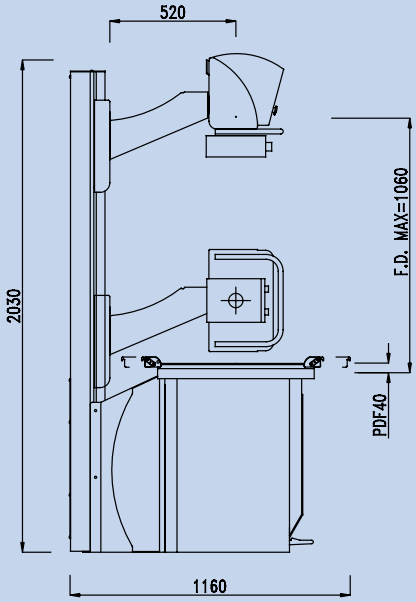

- Variable focal distance (optional)